Data Sheet

Hard-wired AC Surge Protectors
MSB6 series



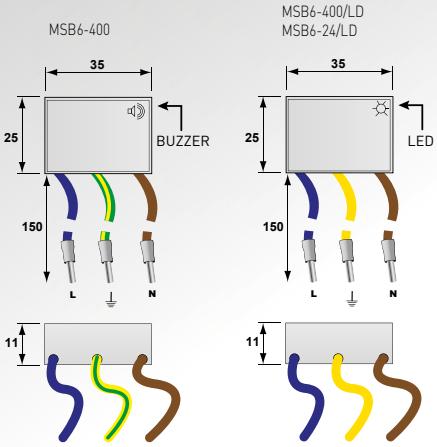

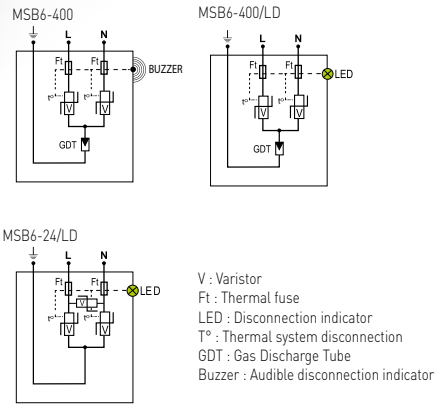

V : Varistor
Ft : Thermal fuse
LED : Disconnection indicator
T° : Thermal system disconnection
GDT : Gas Discharge Tube
Buzzer : Audible disconnection indicator

- **Ultra Compact Type 3 surge protectors for 230 Vac networks**
- **Mounting on plate or terminal**
- **Disconnection signaling by buzzer or Led system**
- **24 V AC or DC version available**
- **EN 61643-11, IEC 61643-11 and UL1449 4ed. compliance**

Caracteristics

CITEL Model		MSB6-400	MSB6-24/LD	MSB6-400/LD
Description		Compact Type 2 hard wired surge protector	Ultra Compact Type 2 hard wired surge protector	Ultra Compact Type 2 hard wired surge protector
Network		230 V single phase	24 Vac-30Vdc	230 V single phase
AC system		TT-TN	-	TT-TN
Protection mode(s)		CM/DM	CM/DM	CM/DM
Max. AC operating voltage	Uc	255 Vac	30 Vac-38 Vdc	255 Vac
Residual current *- Leakage current at Uc*	Ic	None	None	None
Temporary Over Voltage (TOV) Charasteristics - 5 sec.	UT	335 Vac withstand	36 Vac withstand	335 Vac withstand
Temporary Over Voltage (TOV) Charasteristics - 120 mn	UT	440 Vac disconnection	42 Vac disconnection	440 Vac disconnection
Nominal discharge current *- 15 x 8/20 µs impulses*	In	3 kA	0.5 kA	3 kA
Max. discharge current *-max. withstand @ 8/20 µs by pole*	Imax	6 kA	2 kA	6 kA
Withstand on Combination waveform *- Class III test*	Uoc	6 kV	1 kV	6 kV
Withstand on overvoltages *IEEE C62.41.1*		6 kV/6 kA	-	6 kV/6 kA
Protection level CM/DM *@In (8/20µs) and @ 6kV (1.2/50µs)*	Up	1.5 kV/1.5 Kv	0.18 kV/0.18 Kv	1.5 kV/1.5 kV
Admissible short-circuit current	Isccr	3 000 A	3 000 A	3 000 A
Associated disconnectors				
Thermal disconnector		internal		
Installation ground fault breaker		Type «S» or delayed		
Mechnical characteristics				
Dimensions		see diagram		
Connection to Network		wires		
Voltage/operating indicator		without	Green Led ON	Green Led ON
Failsafe behavior		Disconnection		
Disconnection indicator		buzzer ON	Led OFF	Led OFF
Mounting		AC outlet or screw terminal	AC outlet or screw terminal	AC outlet or screw terminal
Operating temperature		-40/+85°C		
Protection rating		IP65		
Housing material		Thermoplastic UL94-V0		
Standards compliance		IEC 61643-11 / EN 61643-11 / UL1449 ed.4		
Part number		561302	561313	561312

CITEL • 2 rue Troyon • 92316 Sèvres Cedex • France • Tel.: +33 1 41 23 50 23 • Fax: +33 1 41 23 50 09 • e-mail: contact@citel.fr • www.citel.fr
F110901J • Document could be modified without notice