PRODUCT DESCRIPTION:
Thermoplastic enclosure

PRODUCT CODE:
SA 081-11

DYNAMIC 3D VIEW:

STATIC 3D VIEW:

Datasheet creation date: 28/05/2021 09:53

tel. +39 039 9906408
+39 039 9903468
fax +39 039 9906203

Via Novarino 9/L
23899 Robbiate (LC)
ITALY

www.comepi.it
comepi@comepi.it
tecnico@comepi.it

TECHNICAL VIEW:

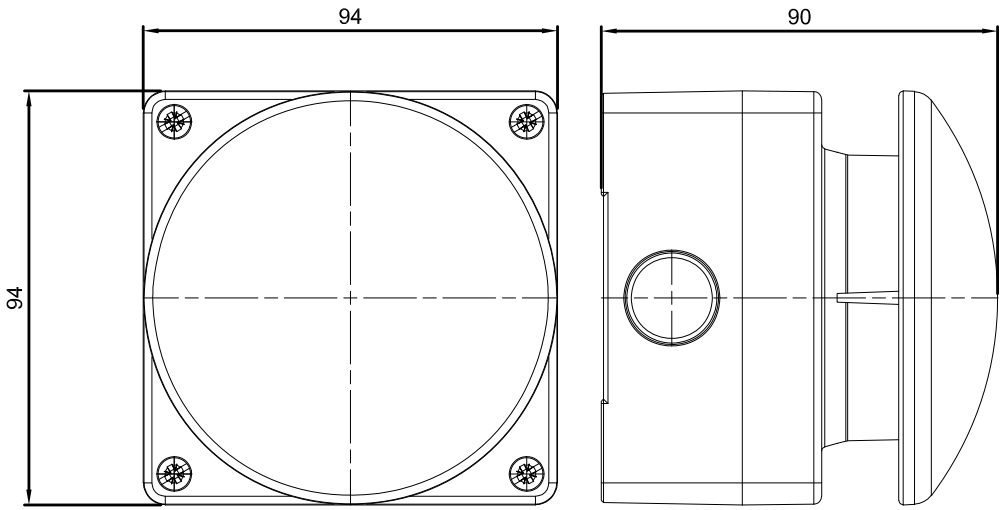

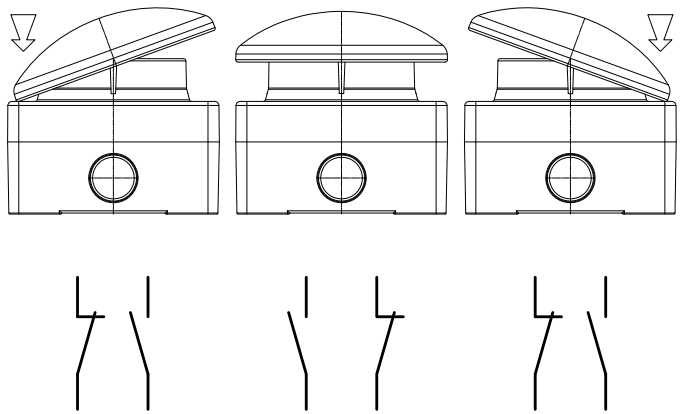

Datasheet creation date: 28/05/2021 09:53

tel. +39 039 9906408
+39 039 9903468
fax +39 039 9906203

Via Novarino 9/L
23899 Robbiate (LC)
ITALY

www.comepi.it
comepi@comepi.it
tecnico@comepi.it

DETAILS:

Code	SA 081-11
Description	Thermoplastic enclosure with emergency ø 90mm mushroom
Material	ABS
Box Color	Grey
Cover Color	Grey
Lenght 1 [mm]	94
Lenght 2 [mm]	94
Height [mm]	101
N. holes	1
IP degree	65
Operating temperature	-25° … +70°
Storage temperature	-40° … +80°
Reference standards	IEC 60947-5-1 ed EN 60947-5-1
Text	/
Operator	ECX 4570
Description	Non illuminated mushroom pushbuttons
Material	Chrome-plated Zamak
Color	Red
Brightness	No
Functionality	wobble mushroom
Outer diameter [mm]	90
Electrical contact	ECX 1030, ECX 1040
Outer diameter [mm]	90
IP degree	65
Electrical contact	ECX 1030, ECX 1040
Description	Contact element
State at rest	1NC + 1NO
Positive opening	Yes
Approvals	CE, cULus, IMQ, EAC
Contact rating UL 508	A300, Q300
Pollution Degree	3
Rated insulation voltage UI [V]	660
Rated Impulsive Voltage Uimp [kV]	6
Conventional thermal current in free air Ith [A]	10
Short-circuit protection Ue min 500Vac-gG (gl) fuses [A]	10
Operating currents Ie - AC-15 (50-60 Hz) According to IEC 60947-5-1	24V - 10A / 240V - 6A / 400V - 4A
Operating currents DC-13 According to IEC 60947-5-1	24V - 2,8A / 125V - 0.55A / 250V - 0.27A
Switching frequency Cycles / hour	3600
Resistance Between Contacts [mΩ]	25
Connecting Terminals	Screw with captive cable clamp
Connecting Terminals [mm²]	1o2 conductors - 0.75 ... 2.5

PRODUCT DRAWING RELEASE:

Datasheet creation date: 28/05/2021 09:53

Last Modification (geometry): 10/06/2020 07:27

tel. +39 039 9906408
+39 039 9903468
fax +39 039 9906203

Via Novarino 9/L
23899 Robbiate (LC)
ITALY

www.comepi.it
comepi@comepi.it
tecnico@comepi.it